100W Constant Power Mode LED Driver

XLG-100 series

User's Manual

IS 15885(Part 2/Sec13) (for XLG-100I type only) NOM Note.15 (Except for Blank type)

(Except for L type) 110 M M SELV IP67 (Except for L type) Type HL E320521 (for 12,24 only) CB Note.12

Features

- Wide input range 100~305VAC(Class Ⅰ)
- Full power output at 70~100% Constant power mode operation
- Metal case with IP67, suitable for outdoor application
- LVLE(H type),Class 2(24V)power unit
- Surge protection with 6KV/4KV (10KV/6KV optional)
- 3 in 1 dimming function (Dim to off and Isolation design)
- India (EESL) version with Input Over Voltage Protection can survive input voltage stress of 440Vac for 48 hours
- Protection functions: OVP/SCP/OCP/OTP
- Life time >50,000 hrs. and 5 years warranty

Applications

- Skyscraper lighting
- Street lighting
- Floodlight Lighting
- Stage lighting
- Fishing lighting
- Horticulture lighting
- Bay lighting
- DMX power supply
- Type HL for use in class Ⅰ, Division 2

GTIN CODE

MW Search: https://www.meanwell.com/serviceGTIN.aspx

Description

XLG-100 series is a 100W LED AC/DC driver featuring the constant power mode.XLG-100 operates from 100~305VAC and offers models with different rated current ranging between 700mA and 8000mA. Thanks to the high efficiency up to 92%, with the fanless design, the entire series is able to operate for -40℃~+90℃ case temperature under free air convection. The design of metal housing and IP67 ingress protection level allows this series to fit both indoor and outdoor applications. Moreover the innovative environment-adaptive capability allows this series to reliably light on the LEDs for all kinds of application environments in almost any spots that may install LED luminaires in the world. XLG-100 series comply with the latest version of IEC61347/GB7000.1-2015 and UL8750 international safety regulations. The output and dimming circuit are also completely in accordance with the new regulations with isolation to ensure the safety of both user and luminaire system during installation.

Model Encoding

XLG - 100 [I] - [L] - [ ]

- [ ] Function options
- [L] Rated output voltage(12/24V or L/H types)
- [I] I: for India version(by request with Input over voltage protection); [ ]: For standard version
- 100 Rated wattage
- XLG Series name

Type	Function	Note
Blank	Io and Vo fixed. (For harsh environment)	By request
A	Io adjustable via built-in potentiometer	In Stock
AB	Io adjustable via built-in potentiometer +3 in 1 dimming function (0~10Vdc, 10V PWM signal and resistance)	In Stock

Note: 1.12V and 24V models without the AB type
2.India version needs MOQ for production, please consult MEANWELL for detail

SPECIFICATION

MODEL		XLG-100□-12-□	XLG-100□-24-□
OUTPUT	DC VOLTAGE	12V	24V
	CONSTANT CURRENT REGION Note.2	8.4~ 12V	16.8~ 24V
	RATED CURRENT (Default)	8A	4A
	RATED POWER	96W	96W
	RIPPLE & NOISE (max.) Note.3	150mVp-p	240mVp-p
	CURRENT ADJ RANGE	Adjustable for A-Type only (via the built-in potentiometer)	
		4 ~ 8A	2~4A
	VOLTAGE TOLERANCE Note.4	±3.0%	±2.0%
	LINE REGULATION	±0.5%	±0.5%
	LOAD REGULATION	±2%	±1%
	SETUP, RISE TIME Note.6	500ms, 100ms/230VAC, 1200ms, 100ms/115VAC	
	HOLD UP TIME (Typ.)	12ms/ 230VAC 12ms/ 115VAC	
INPUT	VOLTAGE RANGE Note.5	100 ~ 305VAC 142 ~ 431VDC (Please refer to "STATIC CHARACTERISTIC" section)	
	FREQUENCY RANGE	47 ~ 63Hz	
	POWER FACTOR	PF≧0.97/115VAC, PF≧0.95/230VAC, PF≧0.92/277VAC@full load	
	TOTAL HARMONIC DISTORTION	THD< 10%(@load≧50%/115VC,230VAC; @load≧75%/277VAC)	
	EFFICIENCY (Typ.)	92%	92%
	AC CURRENT	1.1A / 115VAC 0.5A / 230VAC 0.42A/277VAC	
	INRUSH CURRENT(Typ.)	COLD START 50A(twidth=300μs measured at 50% Ipeak) at 230VAC; Per NEMA 410	
	MAX. No. of PSUs on 16A CIRCUIT BREAKER	8units (circuit breaker of type B) / 14 units (circuit breaker of type C) at 230VAC	
	LEAKAGE CURRENT	<0.75mA / 277VAC	
	NO LOAD POWER CONSUMPTION	No load power consumption <0.5W(for standard version)	
PROTECTION	OVER CURRENT	95 ~ 108%	
		Hiccup mode or Constant current limiting, recovers automatically after fault condition is removed	
	SHORT CIRCUIT	Hiccup mode or Constant current limiting, recovers automatically after fault condition is removed	
	OVER VOLTAGE	13.5 ~ 18V	27 ~ 34V
		Shut down output voltage, re-power on to recover	
	INPUT OVER VOLTAGE Note.7	320 ~ 390VAC (Shut down output voltage when the input voltage exceeds protection voltage, recovers automatically after fault condition is removed)	
		Can survive input voltage stress of 440Vac for 48 hours @ tc 75℃ max	
	OVER TEMPERATURE	Shut down output voltage, re-power on to recover	
ENVIRONMENT	WORKING TEMP.	Tcase=-40 ~ +90℃ (Please refer to " OUTPUT LOAD vs TEMPERATURE" section)	
	MAX. CASE TEMP.	Tcase=+90℃	
	WORKING HUMIDITY	20 ~ 95% RH non-condensing	
	STORAGE TEMP., HUMIDITY	-40 ~ +90℃, 10 ~ 95% RH	
	TEMP. COEFFICIENT	±0.03%/℃ (0 ~ 60℃)	
	VIBRATION	10 ~ 500Hz, 5G 12min./1cycle, period for 72min. each along X, Y, Z axes	
EMC SAFETY &	SAFETY STANDARDS Note.7	UL8750(type"HL"), UL879, CSA C22.2 No. 250.13-12; ENEC BS EN/EN61347-1, BS EN/EN61347-2-13 independent, BS EN/EN62384; GB19510.1 , GB19510.14;EAC TP TC 004;J61347-1(H29), J61347-2-13(H29),KC61347-1,KC61347-2-13, IS15885(Part2/Sec13)(for XLG-100I type only);NOM-058-SCFI-2017(except for Blank type); IP67 approved	
	WITHSTAND VOLTAGE	I/P-O/P:3.75KVAC I/P-FG:2KVAC O/P-FG:1.5KVAC	
	ISOLATION RESISTANCE	I/P-O/P, I/P-FG, O/P-FG:100M Ohms / 500VDC / 25℃/ 70% RH	

EMC SAFETY &		Parameter	Standard	Test Level/Note
	EMC EMISSION	Conducted	BS EN/EN55015(CISPR15) ,GB/T17743	-----
		Radiated	BS EN/EN55015(CISPR15) ,GB/T17743	-----
		Harmonic Current	BS EN/EN61000-3-2 , GB/T17625.1	Class C @load≥50%
		Voltage Flicker	BS EN/EN61000-3-3	-----
	EMC IMMUNITY	BS EN/EN61547		
		Parameter	**Standard**	**Test Level/Note**
		ESD	BS EN/EN61000-4-2	Level 3, 8KV air ; Level 2, 4KV contact
		Radiated	BS EN/EN61000-4-3	Level 3
		EFT/Burst	BS EN/EN61000-4-4	Level 3
		Surge	BS EN/EN61000-4-5	4KV/Line-Line 6KV/Line-Earth(6K/10K option)
		Conducted	BS EN/EN61000-4-6	Level 3
		Magnetic Field	BS EN/EN61000-4-8	Level 4
		Voltage Dips and Interruptions	BS EN/EN61000-4-11	>95% dip 0.5 periods, 30% dip 25 periods, >95% interruptions 250 periods

OTHERS		
	MTBF	2782.6K hrs min. Telcordia SR-332 (Bellcore) ; 276.4Khrs min. MIL-HDBK-217F (25℃)
	DIMENSION	140*63*32mm (L*W*H)
	PACKING	0.58Kg;24pcs /15Kg /0.85CUFT

NOTE

1. All parameters NOT specially mentioned are measured at 230VAC input, rated current and 25℃of ambient temperature.
2. Please refer to "DRIVING METHODS OF LED MODULE".
3. Ripple & noise are measured at 20MHz of bandwidth by using a 12" twisted pair-wire terminated with a 0.1uf & 47uf parallel capacitor.
4. Tolerance : includes set up tolerance, line regulation and load regulation.
5. De-rating may be needed under low input voltages. Please refer to "STATIC CHARACTERISTIC" sections for details.
6. Length of set up time is measured at first cold start. Turning ON/OFF the driver may lead to increase of the set up time.
7. Input voltage only for XLG-100 I series, and I series without UL/CSA certificate.
8. The driver is considered as a component that will be operated in combination with final equipment. Since EMC performance will be affected by the complete installation, the final equipment manufacturers must re-qualify EMC Directive on the complete installation again.
9. The ambient temperature derating of 3.5℃/1000m with fanless models and of 5℃/1000m with fan models for operating altitude higher than 2000m(6500ft).
10. Please refer to the warranty statement on MEAN WELL's website at http://www.meanwell.com
11. This series meets the typical life expectancy of >50,000 hours of operation when Tcase, particularly (tc) point (or TMP, per DLC), is about 80℃or less.
12. Products sourced from the Americas regions may not have the PSE/CCC/BIS/KC logo. Please contact your MEAN WELL sales for more information.
13. For any application note and IP water proof function installation caution, please refer our user manual before using. https://www.meanwell.com/Upload/PDF/LED_EN.pdf
14. To fulfill requirements of the latest ErP regulation for lighting fixture, this LED driver can only be used behind a switch without permanently connected to the mains.
15. If you need the NOM (Mexico) certificate, Please contact MEAN WELL sales representative for details.

※Product Liability Disclaimer ： For detailed information, please refer to https://www.meanwell.com/serviceDisclaimer.aspx

SPECIFICATION

MODEL		XLG-100 □-L-□	XLG-100 □-H-□
OUTPUT	RATED CURRENT (Default)	700mA	2100mA
	RATED POWER	100W	100W
	CONSTANT CURRENT REGION	71 ~ 142V	27 ~ 56V
	FULL POWER CURRENT RANGE	700~1050mA	1750~2780mA
	OPEN CIRCUIT VOLTAGE (max.)	149V	60V
	CURRENT ADJ. RANGE	350~1050mA	875~2780mA
	CURRENT RIPPLE	3.0%(@rated current)	
	CURRENT TOLERANCE	±5%	
	SET UP TIME	500ms/230VAC, 1200ms/115VAC	
INPUT	VOLTAGE RANGE Note.5	100 ~ 305VAC 142VDC ~ 431VDC (Please refer to "STATIC CHARACTERISTIC" ang " DRIVING METHODS OF LED MODULE"section)	
	FREQUENCY RANGE	47 ~ 63Hz	
	POWER FACTOR (Typ.)	PF≧0.97 / 115VAC, PF≧0.95 / 230VAC, PF≧0.92 / 277VAC at full load (Please refer to "Power Factor Characteristic" section)	
	TOTAL HARMONIC DISTORTION	THD< 10% (@ load≧50% at 115VAC/230VAC ,@load≧75% at 277VAC) Please refer to "TOTAL HARMONIC DISTORTION (THD)" section	
	EFFICIENCY (Typ.)	92.5%	91%
	AC CURRENT (Typ.)	1.1A / 115VAC 0.5A / 230VAC 0.42A / 277VAC	
	INRUSH CURRENT(Typ.)	COLD START 50A(t_{width}=300μs measured at 50% I_{peak}) at 230VAC; Per NEMA 410	
	MAX. NO. of PSUs on 16A CIRCUIT BREAKER	8 unit(circuit breaker of type B) / 14 units(circuit breaker of type C) at 230VAC	
	LEAKAGE CURRENT	<0.75mA / 277VAC	
	STANDBY POWER CONSUMPTION	Standby power consumption <0.5W for AB-Type(Dimming OFF)(for standard version)	
PROTECTION	OVER POWER	105 ~ 150%	
		Hiccup mode, recovers automatically after fault condition is removed	
	SHORT CIRCUIT	Hiccup mode or Constant current limiting, recovers automatically after fault condition is removed	
	OVER VOLTAGE	160 ~ 220V	66 ~ 90V
		Shut down output voltage, re-power on to recover	
	INPUT OVER VOLTAGE Note.7	320 ~ 390VAC (Shut down output voltage when the input voltage exceeds protection voltage, recovers automatically after fault condition is removed)	
		Can survive input voltage stress of 440Vac for 48 hours @ tc 75℃ max	
	OVER TEMPERATURE	Shut down output voltage, re-power on to recover	
ENVIRONMENT	WORKING TEMP.	Tcase=-40 ~ +90℃ (Please refer to "OUTPUT LOAD vs TEMPERATURE" section)	
	MAX. CASE TEMP.	Tcase=+90℃	
	WORKING HUMIDITY	20 ~ 95% RH non-condensing	
	STORAGE TEMP., HUMIDITY	-40 ~ +80℃, 10 ~ 95% RH non-condensing	
	TEMP. COEFFICIENT	±0.03%/℃ (0 ~ 60℃)	
	VIBRATION	10 ~ 500Hz, 5G 12min./1cycle, period for 72min. each along X, Y, Z axes	
SAFETY & EMC	SAFETY STANDARDS Note.7	UL8750(type"HL"), CSA C22.2 No. 250.13-12; ENEC BS EN/EN61347-1, BS EN/EN61347-2-13 independent, BS EN/EN62384; GB19510.1 , GB19510.14; EAC TP TC 004;J61347-1(H29), J61347-2-13(H29),KC61347-1,KC61347-2-13, IS15885(Part2/Sec13)(for XLG-100I type only);NOM-058-SCFI-2017(except for Blank type); IP67 approved	
	WITHSTAND VOLTAGE	I/P-O/P:3.75KVAC I/P-FG:2KVAC O/P-FG:1.5KVAC	
	ISOLATION RESISTANCE	I/P-O/P, I/P-FG, O/P-FG:100M Ohms / 500VDC / 25℃/ 70% RH	
	EMC EMISSION	**Parameter**	**Standard** / **Test Level/Note**
		Conducted	BS EN/EN55015(CISPR15) ,GB/T17743 / -----
		Radiated	BS EN/EN55015(CISPR15) ,GB/T17743 / -----
		Harmonic Current	BS EN/EN61000-3-2 ,GB/T17625.1 / Class C @load≥50%
		Voltage Flicker	BS EN/EN61000-3-3 / -----
	EMC IMMUNITY	BS EN/EN61547	
		Parameter	**Standard** / **Test Level/Note**
		ESD	BS EN/EN61000-4-2 / Level 3, 8KV air ; Level 2, 4KV contact
		Radiated	BS EN/EN61000-4-3 / Level 3
		EFT/Burst	BS EN/EN61000-4-4 / Level 3
		Surge	BS EN/EN61000-4-5 / 4KV/Line-Line 6KV/Line-Earth(6K/10K option)
		Conducted	BS EN/EN61000-4-6 / Level 3
		Magnetic Field	BS EN/EN61000-4-8 / Level 4
		Voltage Dips and Interruptions	BS EN/EN61000-4-11 / >95% dip 0.5 periods, 30% dip 25 periods, >95% interruptions 250 periods
OTHERS	MTBF	2782.6K hrs min. Telcordia SR-332 (Bellcore) ; 276.4Khrs min. MIL-HDBK-217F (25℃)	
	DIMENSION	140*63*32mm (L*W*H)	
	PACKING	0.58Kg;24pcs /15Kg /0.85CUFT	

NOTE

1. All parameters NOT specially mentioned are measured at 230VAC input, rated current and 25℃ of ambient temperature.
2. Please refer to "DRIVING METHODS OF LED MODULE".
3. Ripple & noise are measured at 20MHz of bandwidth by using a 12" twisted pair-wire terminated with a 0.1uf & 47uf parallel capacitor.
4. Tolerance : includes set up tolerance, line regulation and load regulation.
5. De-rating may be needed under low input voltages. Please refer to "STATIC CHARACTERISTIC" sections for details.
6. Length of set up time is measured at first cold start. Turning ON/OFF the driver may lead to increase of the set up time.
7. Input voltage only for XLG-100 I series, and I series without UL/CSA certificate.
8. The driver is considered as a component that will be operated in combination with final equipment. Since EMC performance will be affected by the complete installation, the final equipment manufacturers must re-qualify EMC Directive on the complete installation again.
9. The ambient temperature derating of 3.5℃/1000m with fanless models and of 5℃/1000m with fan models for operating altitude higher than 2000m(6500ft).
10. Please refer to the warranty statement on MEAN WELL's website at http://www.meanwell.com
11. This series meets the typical life expectancy of >50,000 hours of operation when Tcase, particularly (tc) point (or TMP, per DLC), is about 80℃ or less.
12. Products sourced from the Americas regions may not have the PSE/CCC/BIS/KC logo. Please contact your MEAN WELL sales for more information.
13. For any application note and IP water proof function installation caution, please refer our user manual before using. https://www.meanwell.com/Upload/PDF/LED_EN.pdf
14. To fulfill requirements of the latest ErP regulation for lighting fixture, this LED driver can only be used behind a switch without permanently connected to the mains.
15. If you need the NOM (Mexico) certificate, Please contact MEAN WELL sales representative for details.

※ Product Liability Disclaimer : For detailed information, please refer to https://www.meanwell.com/serviceDisclaimer.aspx

■ BLOCK DIAGRAM

PFC fosc : 50~120KHz
PWM fosc : 60~130KHz

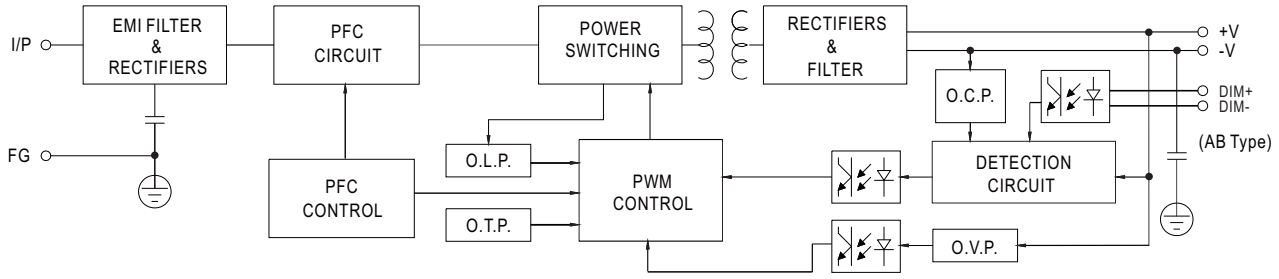

■ DRIVING METHODS OF LED MODULE

※ I-V Operating Area

◎ **XLG-100-L**

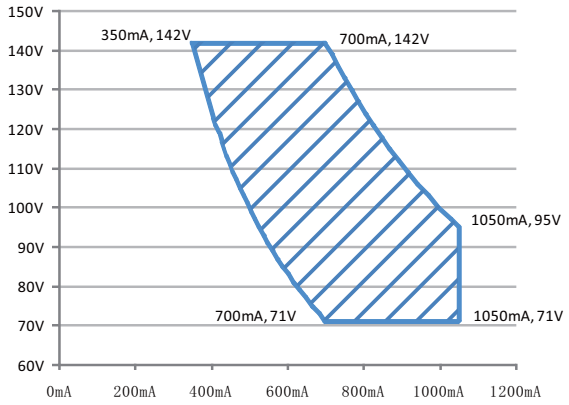

Recommend Performance Region

◎ **XLG-100-H**

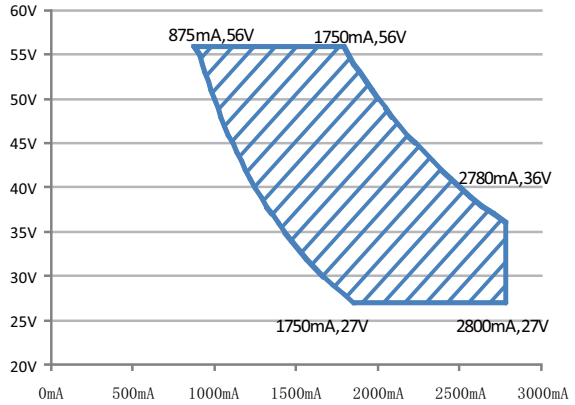

Recommend Performance Region

◎ **XLG-100-12,24**

※ This series is able to work in either Constant Current mode (a direct drive way) or Constant Voltage mode (usually through additional DC/DC driver) to drive the LEDs.

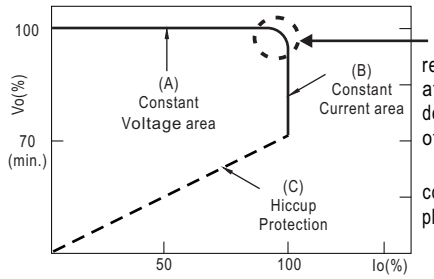

Typical output current normalized by rated current (%)

In the constant current region, the highest voltage at the output of the driver depends on the configuration of the end systems.

Should there be any compatibility issues, please please contact MEAN WELL.

■ DIMMING OPERATION

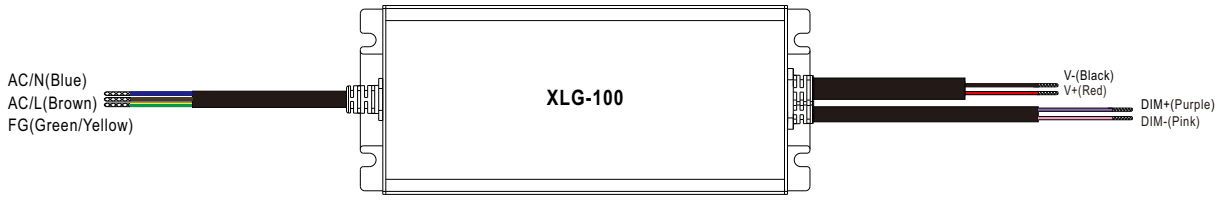

※ 3 in 1 dimming function (for AB-Type)

- Output constant current level can be adjusted by applying one of the three methodologies between DIM+ and DIM-: 0 ~ 10VDC, or 10V PWM signal or resistance.
- Direct connecting to LEDs is suggested. It is not suitable to be used with additional drivers.
- Dimming source current from power supply: 100 μA (typ.)

◎ Applying additive 0 ~ 10VDC

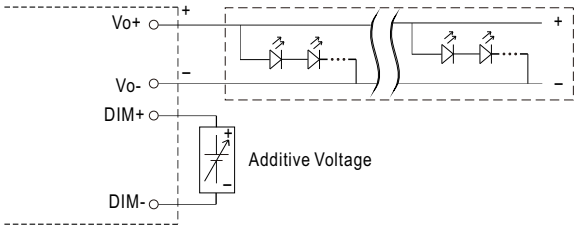

"DO NOT connect "DIM- to Vo-"

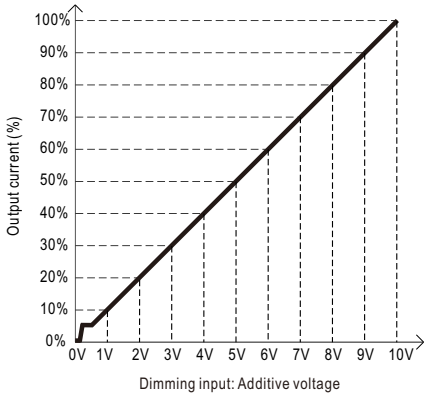

◎ Applying additive 10V PWM signal (frequency range 100Hz ~ 3KHz):

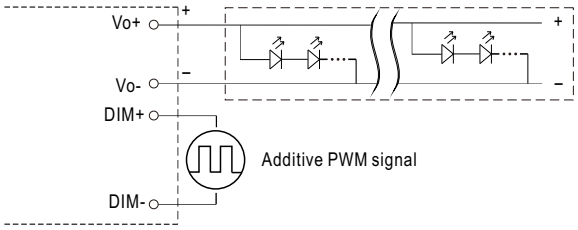

"DO NOT connect "DIM- to Vo-"

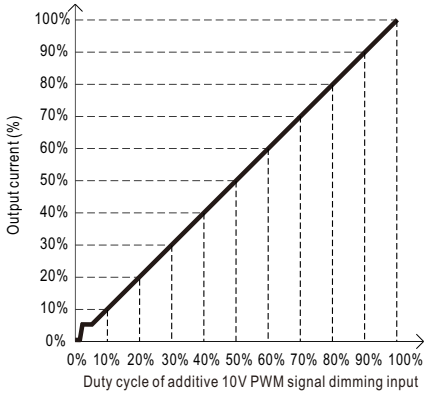

◎ Applying additive resistance:

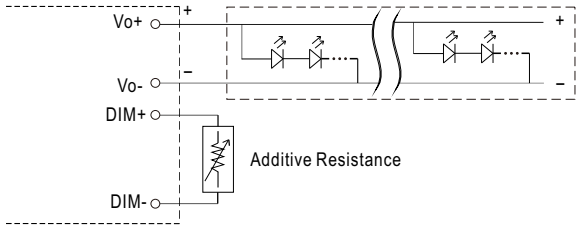

"DO NOT connect "DIM- to Vo-"

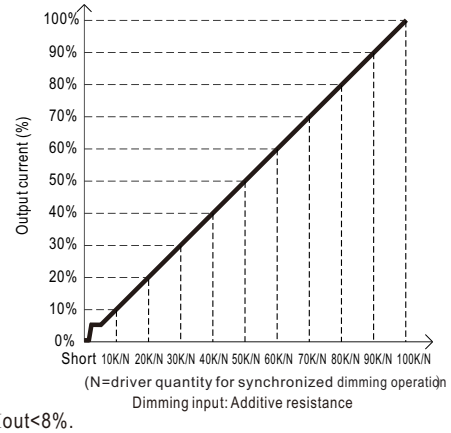

Note : 1. Min. dimming level is about 8% and the output current is not defined when 0%< Iout<8%.
2. The output current could drop down to 0% when dimming input is about 0kΩ or 0Vdc, or 10V PWM signal with 0% duty cycle.

■ OUTPUT LOAD vs TEMPERATURE

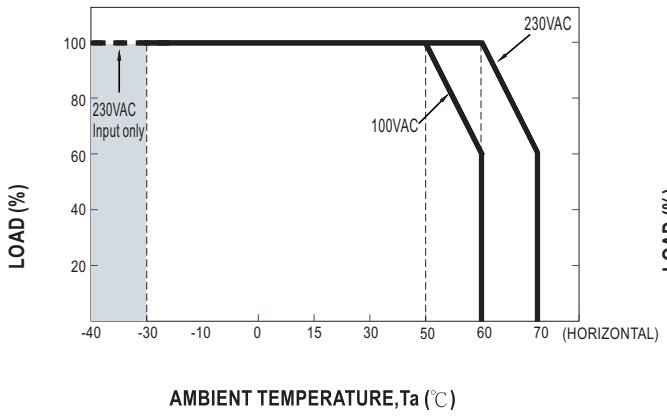

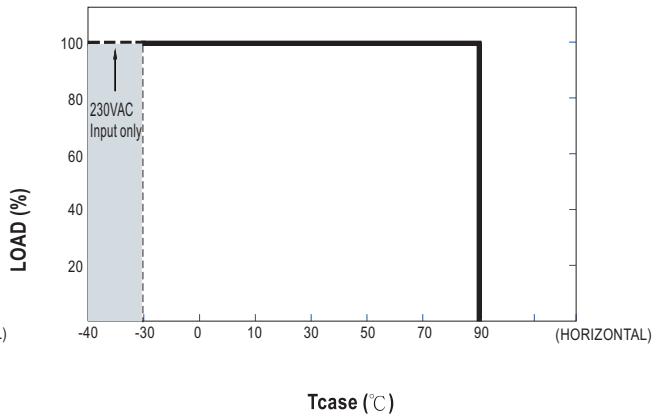

If XLG-100 operates in Constant Current mode with the rated current the maximum workable Ta is 60℃ (Typ. 230VAC) or 50℃ (Typ.100VAC)
Below 110VAC@ -30℃ may retry to 2nd setup

■ STATIC CHARACTERISTIC

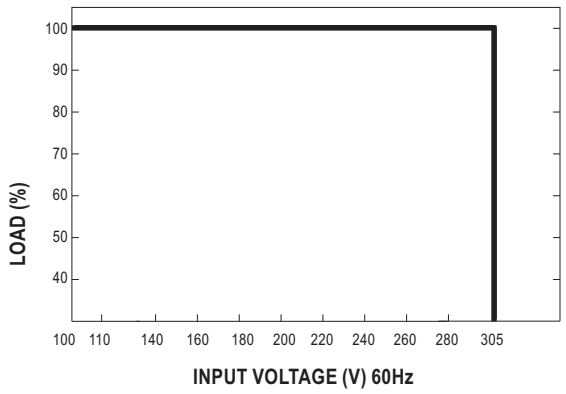

■ POWER FACTOR (PF) CHARACTERISTIC

※ Tcase at 75℃

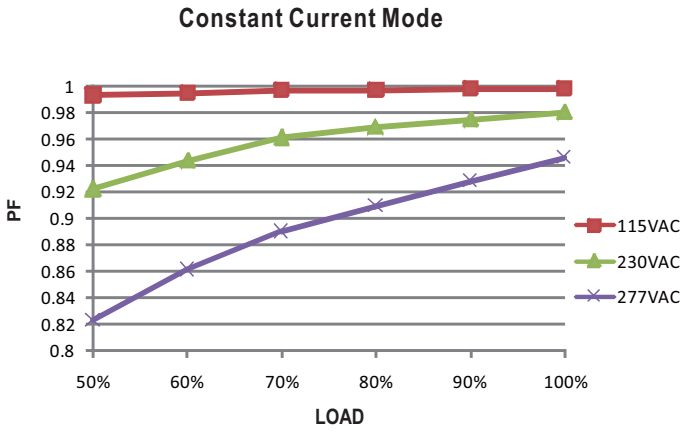

■ TOTAL HARMONIC DISTORTION (THD)

※ XLG-100-L Model, Tcase at 75℃

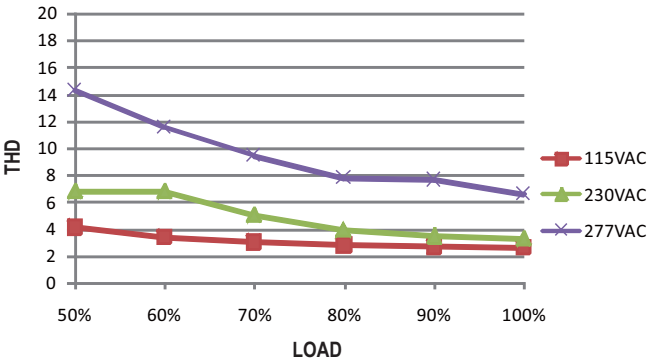

■ EFFICIENCY vs LOAD

XLG-100 series possess superior working efficiency that up to 92.5% can be reached in field applications.

※ XLG-100-L Model, Tcase at 75℃

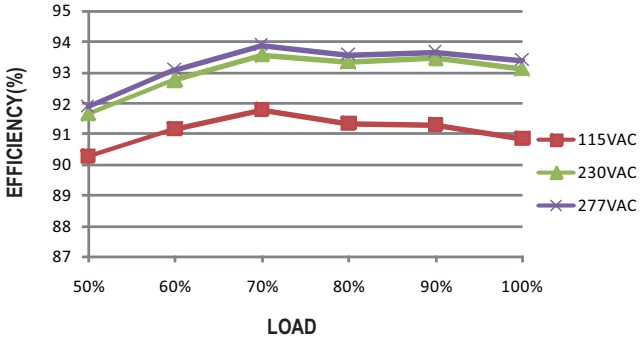

■ LIFE TIME

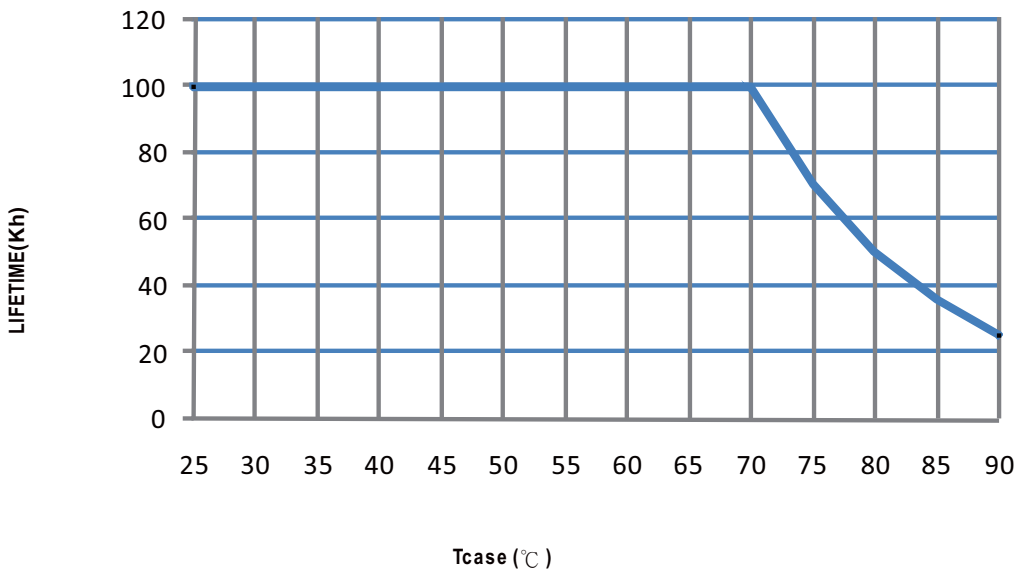
120
100
80
60
40
20
0
LIFETIME(Kh)
25 30 35 40 45 50 55 60 65 70 75 80 85 90
Tcase (℃)

■ MECHANICAL SPECIFICATION

Case No.:275B Unit:mm

※ **Blank-Type**

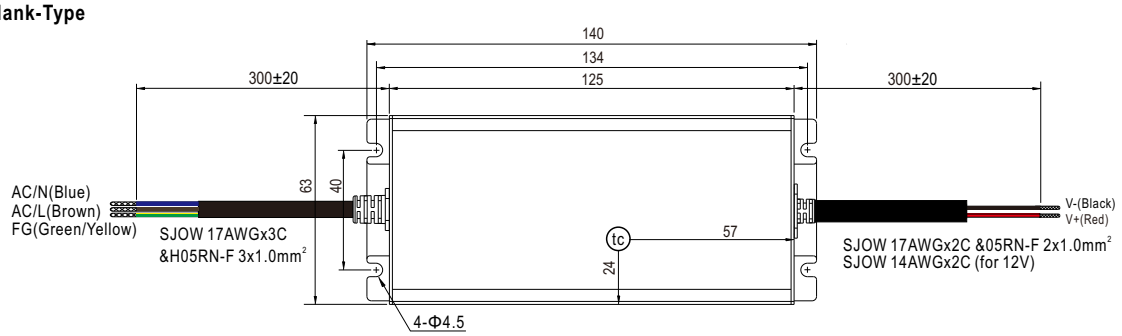

• (tc) : Max. Case Temperature

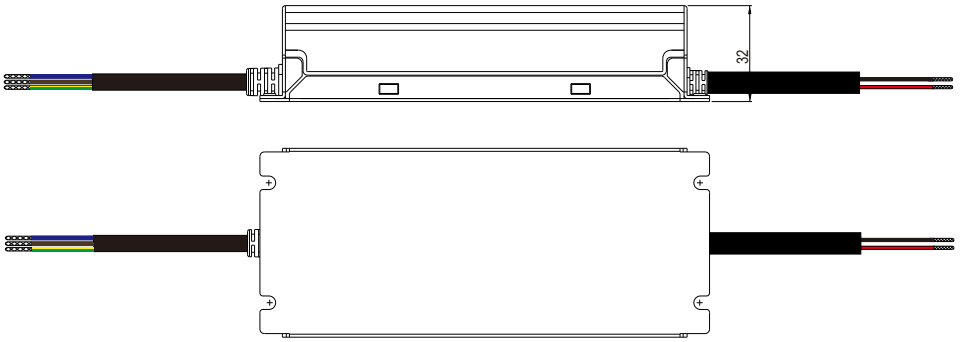

※ **A-Type**

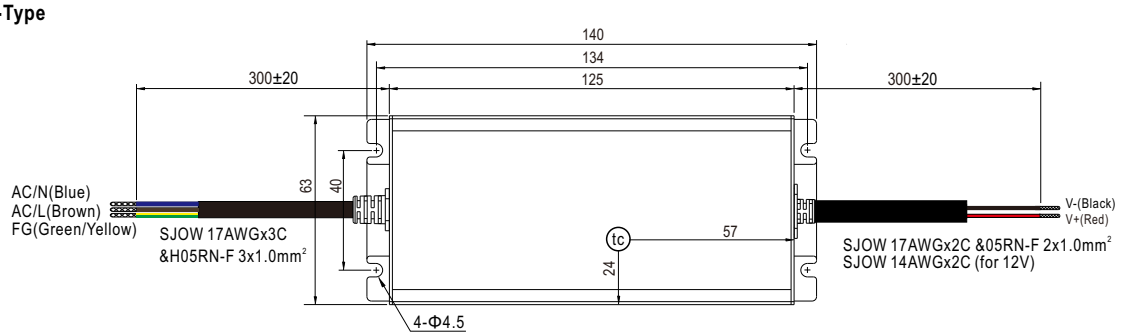

• (tc) : Max. Case Temperature

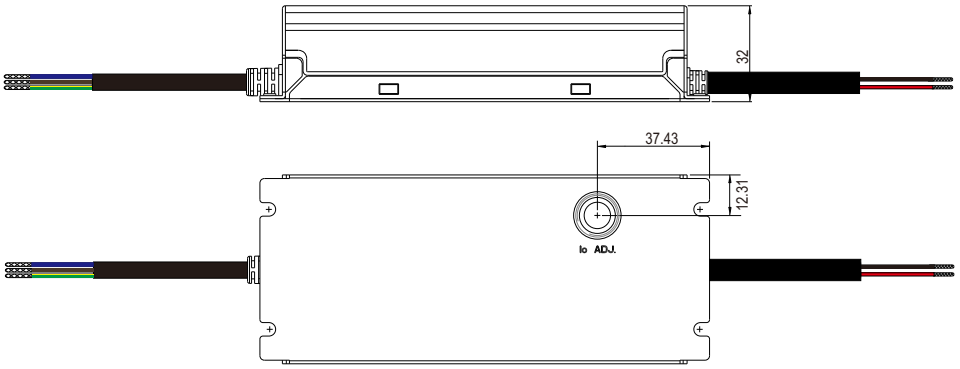

※ **AB-Type**

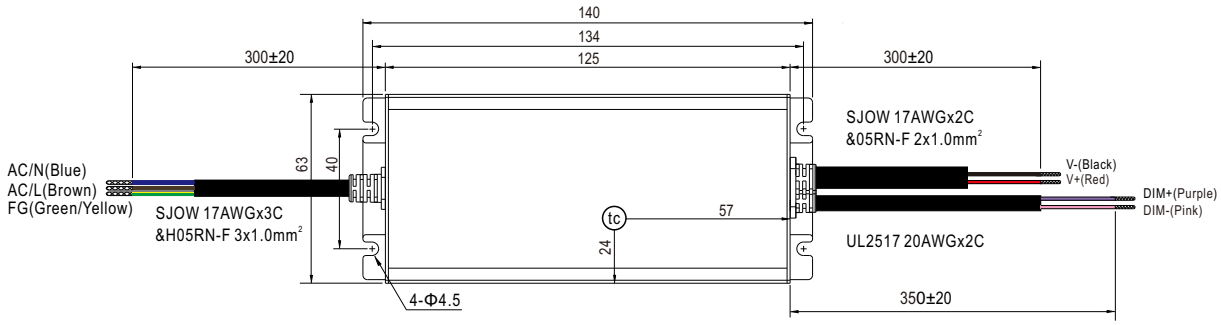

• tc : Max. Case Temperature

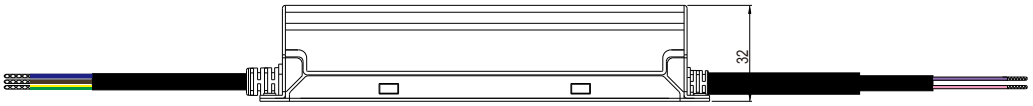

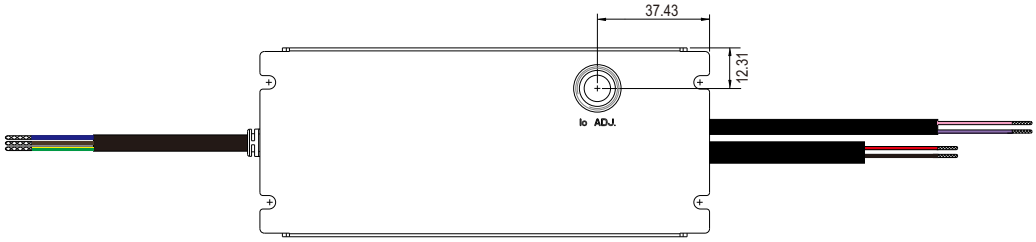

■ INSTALLATION MANUAL

Please refer to : http://www.meanwell.com/manual.html